RIO DE JANEIRO MARU

M.V. "Rio de Janeiro Maru".

Nagasaki Report No.1726.

M.S. "BUENOS AIRES MARU"

"RIO DE JANEIRO MARU" CONSTRUCTION PROFILE AND DECK PLAN (SHEET I.)

SCALE 1/8" = 1 FOOT.

(FINISHED PLAN.)

9th 1929.

NAGASAKI WORKS, MITSUBISHI ZOSENKAISHA, LTD.
三菱造船株式會社
NO. 15795
SHIP DESIGNING OFFICE
DATE MAY 12 1930
長崎造船所

M.V. "Rio de Janeiro Maru".

Nagasaki Report No.1726.

M.S. "RIO DE JANEIRO MARU"
CONSTRUCTION PROFILE AND DECK PLAN (SHEET I.)

SCALE 1/8" = 1 FOOT.
(FINISHED PLAN.)

TWEEN DECK PANTING STRINGER
4TH PANTING STRINGER
UPPER DECK
2ND DECK
3RD DECK
F'CLE DECK
HOSPITAL
LAUNDRY
OILERS QUARTER
STEERAGE ENTRANCE
BATH
W.C.
1ST CLASS VERANDAH
1ST CLASS SMOKING ROOM
SKYLIGHT
FUNNEL
1ST CLASS ACCOMMODATION
1ST CLASS SOCIAL HALL
OFFICERS QUARTER
FLYING BRIDGE DK
1ST CLASS DINING SALOON
BRIDGE FRONT
BRIDGE DK
3RD CLASS OR STEERAGE ACCOMODATION
3RD CLASS DINING SALOON
CREWS QUARTER
PAINT STORE
BOATSWAIN STORE
No. 5 CARGO HATCH
No. 4 CARGO HATCH
No. 3 CARGO HATCH
No. 2 CARGO HATCH
No. 1 CARGO HATCH
STEERAGE OR CARGO SPACE
CARGO SPACE
FROZEN CARGO SPACE
DONKEY BOILER
BAGGAGE ROOM
SHELL TIGHT ROOM
PROVISION STORE
SILK ROOM
No. 5 HOLD
No. 4 HOLD
ENGINE ROOM
No. 3 HOLD
No. 2 HOLD
No. 1 HOLD
2ND PANTING STRINGER
3RD PANTING STRINGER
4TH PANTING STRINGER
SHAFT Do SPACE
TUNNEL WELL
No. 9 F.O. TANK OR W.B. TANK (AT CENTRE)
No. 8 F.O. TANK OR W.B. TANK
No. 5 F.O. OR W.B. TANK
LUBRICATION OIL DRAIN TANK
COFFERDAM
PISTON COOLING WATER TANK
No. 4 FUEL OIL OR W.B. TANK
No. 3 FUEL OIL OR W. BALLAST TANK
No. 2 FUEL OIL OR WATER BALLAST TANK
No. 1 FUEL OIL OR WATER BALLAST TANK
TOP OF TANK SIDE BRACKET LINE
TANK TOP FLAT
F.P.
24" FRAME SPACE
33" FRAME SPACE
27" FRAME SPACE
3/5 L
1/2 L
15% L
SECTION AT C. (LOOKING AFT.)
STEERING ENGINE ROOM
CENTRE GIRDER ·48"
1ST PANTING STRINGER.
BRACKET 13" × ·36"
2ND PANTING STRINGER
SECTION AT F. No. 30 (LOOKING AFTWARD)
SECTION AT F.No. 157 LOOKING FORWARD.
STRENGTHENING BOTTOM FORWARD.
BOAT DECK HOUSE TOP.
FLYING BRIDGE Dk. BEAM 5" × 3" × ·32" ANGLE
SKYLIGHT. (OVER SOCIAL HALL)
STEEL SCREEN
12" GUTTER WATER WAY
9" GUTTER WATER WAY.
STEEL WALL UNDER
CARLING 10" × 3½" × 3½" × ·50" CH. FOR BOAT DAVIT.
2ND PANTING STRINGER
3RD PANTING STRINGER
CHAIN LOCKER
CHAIN LOCKER BOTTOM
CENTRE DIVISION
PANTING BEAM 12" × 3½" × ·44" B.A.
KNEE 36" × 27" × ·58"

MAIN FRAME 8" × 3½" × ·42" B.A. EXTEND FROM 3RD Dk. TO UPPER DECK

MAIN FRAME 8" × 3½" × ·42" B.A. EXTEND TO UPPER Dk. AND WEB CUT DOWN TO FORM 6" × 3½" × ·42" A. BETWEEN 2ND & UPP. Dk. AT ALT. FRAME WITH BACK BAR 3½" × 3½" × ·42" A. IN AFT PEAK TANK

MAIN FRAME BELOW W.T. OR O.T. FLAT 9" × 3½" × ·46" B.A. IN CARGO HOLD 9" × 3½" × ·50" B.A. EXTEND TO 3RD & UPPER Dk. AT ALT. FR. & WEB CUT DOWN TO FORM 6" × 3½" × ·50" A. BETWEEN 2ND & UPPER DECKS. TWEEN Dk. FRAME 8" × 3½" × ·36" B.A. EXTEND FROM 3RD Dk. TO UPPER Dk. AT ALTERNATE FRAME. FRAMING IN WAY OF BOSSING AS PER SKETCH.

MAIN FRAME 12" × 3½" × ·44" B.A. EXTEND TO 3RD DECK. 11" × 3½" × ·54" B.A. FRAME EXTEND FROM 3RD TO UPPER DKS. AT ALTLY. AND WEB CUT DOWN TO FORM 6" × 3½" × ·54" A. BETWEEN 2ND & UPPER DECKS. TWEEN Dk. FRAME 8" × 3½" × ·36" B.A. EXTEND FROM 3RD Dk. TO UPP. Dk. AT ALT. FR.

MAIN FRAME 11" × 3½" × ·54" B.A. EXTEND TO 3RD & UPPER DECKS AT ALT. FRAME & WEB CUT DOWN TO FORM 6" × 3½" × ·54" A. BETWEEN 2ND & UPPER DECKS. TWEEN Dk. FRAME 8" × 3½" × ·36" B.A. EXTEND FROM 3RD Dk. TO UPP. Dks. AT ALT. FRAME

MAIN FRAME 11" × 3½" × ·54" B.A. EXTEND TO 3RD & UPPER DECKS AND TO BRIDGE DKS. WHERE FITTED AT ALT. FRAME & WEB CUT DOWN TO FORM 6" × 3½" × ·54" A. BETWEEN UPPER & BRIDGE DECKS. TWEEN Dk. FRAME 8" × 3½" × ·36" B.A. EXTEND FROM 3RD TO UPPER DECKS AND TO BRIDGE DKS WHERE FITTED AT ALT. FR. ALL FRAMES CUT & BRACKETED AT O.T. FLAT.

MAIN FRAME 11" × 3½" × ·54" B.A. EXTEND TO 3RD & UPP. DKS. AT ALT. FR. & WEB CUT DOWN TO FORM 6" × 3½" × ·54" A. BETWEEN 2ND & UPP. DKS. TWEEN Dk. FR. 8" × 3½" × ·36" B.A. EXTEND FROM 3RD TO UPPER DKS. AT ALT. FRAME

MAIN FRAME 11" × 3½" × ·54" B.A. EXTEND TO 3RD & UPPER DECKS AND TO F'CLE DKS. WHERE FITTED AT ALT. FR. & WEB CUT DOWN TO FORM 6" × 3½" × ·54" A. BETWEEN UPPER & F'CLE DKS. TWEEN Dk. FRAME 8" × 3½" × ·36" B.A. EXTEND TO UPPER Dk. AND F'CLE Dk. WHERE FITTED AT ALTERNATE FRAME. REVERSE FRAME 5" × 3½" × ·46" A. TO EVERY FRAME EXTEND TO 3RD DECK (DEPTH OF FRAME 11")

MAIN FRAME 8" × 3½" × ·42" B.A. EXTEND TO F'CLE Dk. AND WEB CUT DOWN TO FORM 6" × 3½" × ·42" A. BETWEEN UPPER & F'CLE Dk. AT ALT. FR. ALL FRAMES CUT & BRACKETED AT W.T. FLAT.

CARGO HATCHWAY

HATCH No.	F.No.	SIZE OF HATCH	Dk.	No. OF WEB	WEB BEAM	TOP & BOTTOM ANGLE	HEIGHT OF COAMING	THICK. OF COAMING SIDE	THICK. OF COAMING END	COAMING ANGLE	CARRIER ANGLE	COAMING HORIZONTAL STIFFENERS BULB ANGLE
No. 1	145-154	20'-3" × 16'-0"	UPPER	3	14 × ·34	3½ × 3 × ·42 D.A.	33"	·44"	·44"	3½ × 3 × ·44 A.	3½ × 3½ × ·50 D.A.	7" × 3" × ·40" B.A. SIDE ONLY WITH STAY
	"	"	2ND	3	"	"	9"	"	—	9 × 3½ × ·40 B.A.	"	
	"	"	3RD	3	"	"	3"	"	—	3 × 3 × ·40 A.	"	
No. 2	123-133	27'-6" × 18'-0"	UPPER	5	15 × ·36	4 × 3 × ·44 D.A.	33"	·44"	·44"	3½ × 3 × ·44 A.	"	7" × 3" × ·40" B.A. SIDE WITH STAY & AT AFTER END
	122-133	30'-3" × 18'-0"	2ND	5	16 × ·36	"	9"	"	—	9 × 3½ × ·40 B.A.	"	
	"	"	3RD	5	"	"	3"	"	—	3 × 3 × ·40 A.	"	
No. 3	102-108	16'-6" × 18'-0"	BOAT	3	15 × ·36	4 × 3 × ·44 D.A.	33"	·44"	·44"	3 × 3 × ·44 A.	"	
	"	"	BRIDGE	TRUNKED	—	—	—	—	—	—	—	
	"	"	UPPER		—	—	—	—	—	—	—	
	"	"	2ND		—	—	—	—	—	—	—	
	"	"	3RD	3	22 × ·44	4 × 3 × ·44 D.A.	3"	·44"	—	3 × 3 × ·40 A.	3½ × 3½ × ·50 D.A.	
No. 4	40-49	24'-9" × 18'-0"	UPPER	4	16 × ·36	"	33"	"	·44"	3½ × 3 × ·44 A.	"	7" × 3" × ·40" B.A. SIDE ONLY WITH STAY
	40-50	27'-6" × 18'-0"	2ND	5	15 × ·36	"	9"	"	—	9 × 3½ × ·40 B.A.	"	
	"	"	3RD	5	"	"	3"	"	—	3" × 3 × ·40 A.	"	
No. 5	22-29	19'-3" × 16'-0"	UPPER	3	14 × ·34	3½ × 3 × ·42 D.A.	33"	"	·44"	3½ × 3 × ·44 A.	"	7" × 3" × ·40" B.A. SIDE WITH STAY & ALSO AT AFTER END
	"	"	2ND	3	"	"	9"	"	—	9 × 3½ × ·40 B.A.	"	
	"	"	3RD	3	"	"	3"	·44"	—	3" × 3 × ·40 A.	"	

TRUNKED CARGO HATCHWAY

PLATE ·30" STIFFENER 3" × 1½" H.R. SPACED 24" APART
·40 VERTICAL CORNER PLATE.
·44" COAMING PLATE.

BOAT DECK.

BEAM 5" × 3" × ·36" A.
KNEE AS PER MIDSHIP SECTION.
CURTAIN PLATE 14" × ·34"
STRINGER ANGLE 3" × 3" × ·34" A.
GUTTER WAY ANGLE 2½" × 2" × ·36" A.
STANCHION 5" × 5" × ·40" TEE SPACED 3' F.S. APART

WEB BEAMS AS PER MIDSHIP SECTION.

M.V. "Rio de Janeiro Maru".

Nagasaki Report No.1726.

~~M.S. "BUENOS AIRES MARU"~~

M.S. "RIO DE JANEIRO MARU"

CONSTRUCTION PROFILE AND DECK PLAN (SHEET II)

SCALE 1/8" = 1 FOOT.

(FINISHED PLAN.)

Dec. 9th 1929

NAGASAKI WORKS, MITSUBISHI ZOSENKAISHA, LTD.
三菱造船株式會社
NO. 15796
SHIP DESIGNING OFFICE
DATE MAY 12 1930
長崎造船所

007846-007856-0134

007846-007856-0134

AFT BOAT DECK
AFT WINCH PLATFORM
BRIDGE OF HOUSE
STRENGTH BRIDGE DECK
1ST CLASS ACCOMMODATION
ENGINE OPENING
NO. 3 TRUNKED CARGO HATCH
1ST CLASS DINING SALOON
BRIDGE DECK
UPPER OF HOUSE
FORE WINCH PLATFORM
F'CLE DECK
UPPER DECK
WOOD PLANK 3" O.P. WHERE EXPOSED TO WEATHER
OFFICERS & ENGINEERS ACCOMMODATION
3RD CLASS ACCOMMODATION
3RD CLASS DINING SALOON
JAPANESE GALLEY
EUROPEAN GALLEY
NO. 5 CARGO HATCH
NO. 4 CARGO HATCH
NO. 2 CARGO HATCH
NO. 1 CARGO HATCH
2ND DECK
3RD DECK
REFRIGERATED CARGO & PROVISION SPACE
PROVISION STORE & BAGGAGE ROOM
AFT PEAK TANK
FORE PEAK TANK
W.T. FLAT
W.T. 3. P. G. UNDER
STEEL WALL CHAIN LOCKER BHD UNDER
CARPENTER SHOP
W.T. BHD.
WASH PL. UNDER
PILLAR ABOVE
27" F.S.
24" F.S.
CHAIN LOCKER
1ST PANTING STRINGER
PANTING BEAM 12" × 3½" × .45" B.A.
KNEE 36" × 27" × .58"
5 × 5 × .38" A.
DEEP BEAM
WASH PLATE
STEEL
FRAME SPACE

M.V. "Rio de Janeiro Maru".

Nagasaki Report No.1726.

M.S. "BUENOS AIRES MARU"

M.S. "RIO DE JANEIRO MARU"
CONSTRUCTION PROFILE
AND DECK PLAN (SHEET II)
SCALE 1/8" = 1 FOOT.
(FINISHED PLAN.)

Dec. 9th 1929

00784b-007856 0137

M.V. "Rio de Janeiro Maru".

Nagasaki Report No.1726.

S.Nº 45~~6~~-7.

~~"BUENOS AIRES MARU"~~ & "RIO DE JANEIRO MARU."

MIDSHIP SECTION.

LLOYD'S CLASS 100 A.1. "WITH FREEBOARD."

460'-0" × 62'-0" × 39'-6".

(FINISHED PLAN.)

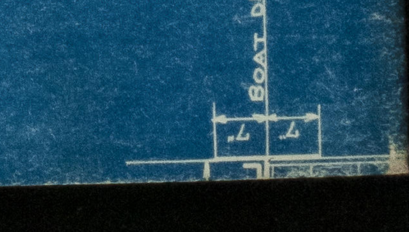

NAGASAKI WORKS, MITSUBISHI ZOSENKAISHA, LTD.
三菱造船株式會社
NO. 15797.
SHIP DESIGNING OFFICE
DATE MAY 12 1930
長崎造船所

007846-007856-0130

S. Nos 456-7.

"BUENOS AIRES MARU" & "RIO DE JANEIRO MARU".

MIDSHIP SECTION.

SCALE ½ TO ONE FOOT.

LLOYD'S CLASS 100 A.1 "WITH FREEBOARD".

(FINISHED PLAN.)

N.B.:- ALL THE SECTIONS USED THROUGHOUT THE SHIP ARE REVISED BRITISH STANDARD SECTIONS.

PRINCIPAL DIMENSIONS.	
LENGTH BETWEEN PERPENDICULARS	460'-0"
LENGTH OVER ALL	479'-0"
BREADTH MOULDED	62'-0"
DEPTH	39'-6"
DRAUGHT	26'-0" EXTREME.
DEPTH "D" FOR SCANTLING NUMERALS	39.92

SCANTLING NUMERALS		
1ST LONGITUDINAL NUMERAL	(L×D)	18,363.0
2ND " "	L×(B+D).	46,883.2
PROPORTION TO UPPER DECK.		11.65
" TO BRIDGE "		9.69
FRAMING DEPTH		
IN WAY OF ENG. ROOM.		18'-0"
" FORE CARGO HOLD (18'-11"-½ EXCESS OF TANK SIDE BKT.)		18'-4½"
" AFT " "		8'-0"

EQUIPMENT NUMBER.		
L×(B+D)	460×(62+39.5)= 46.690	
FCLE DECK	49.0×7.5×¾ =275.5	
BRIDGE "	79.75×8.0×¾=478.0	
UPPER DK. HOUSE	112.75×8.0=902.0	4,345.3×½=2,172.70
BRIDGE " "	26.0×10.0=260.0 160.75×8.0=1286.0	
UPPER DK. HOUSE AFT	35.75×7.5=268.1	
AFT BOAT DK. HOUSE	39.0×7.5=292.5	
BOAT DK. HOUSE FORE	24.75×8.0=19.8	
" " " AFT	33.75×9.0=303.8 25.8×8.0=206.4	
" " " MIDSHIP	31.5×9.0=283.5	
CASING	34.5×10.0=345.0	
LETTER e ✝		49,616.2

EQUIPMENTS.		
3 BOWER ANCHOR STOCKLESS	COLLECTIVE	244.5 CWTS
STREAM ANCHOR ORDINARY EX. STOCK		25 "
STUD CHAIN CABLE	300 FMS	2 9/16" DIA.
STEEL WIRE FOR STREAM ANCHOR	120 " 4¾" CIR	(SIX STRANDS WITH 24 WIRES)
TOW LINE STEEL WIRE	130 " 5½" "	(Do.).
HAWSERS MANILA	2-100"	8" CIR.
WARPS "	2-100"	8" "

KEEL & SHELL PLATING		
KEEL PLATE	55"×.86" - .76"	
BOTTOM PLATE	.68" ~ .52"	
SIDE "	.66" ~ .50"	
BOSS "	.76"	
BRIDGE SIDE PLATE	.58"	
F'CLE " "	.44"	
SHEER STRAKE	1.16" AT BREAKS .60" (RULE .52")×.77"-.50"	.66 IN WAY OF BRIDGE
TO BE INCREASED .04" FOR COMPENSATION OF 12" AIR PORT BELOW SHEER STRAKE	.78"×.70" (RULE .52"×.73")-.50"	

FORGINGS & CASTINGS	
STEM (ROLLED M.S.)	10½"×2¾"
STERN FRAME WITHOUT APERTURE	AS PER PLAN

FRAME SPACE.

24" APART IN BOTH PEAKS

27" APART FOR FORWARD OF 3/5 L. ⊗ TO COLL. BHD.

33" ELSEWHERE.

TANK SIDE BRACKET	FORE HOLD & ENG. ROOM (EXCEPT FOR FORWARD OF 15% L. FROM STEM)	FORWARD OF 15% L. FROM STEM.	AFTER HOLD.
PLATE	.50"	.50"	.48"
CONTINUOUS GUSSET PLATE	.48"-.44"	.44"	AS PER PLAN
NO. OF RIVET ON GUSSET	7-⅞" D RIV.	8-⅞" D RIV.	
VERT. ANGLE ON MARGIN	6"×6"×.48" A.	6"×6"×.48" A.	
NO. OF RIV. (BKT. TO MARGIN)	14-⅞ D. RIV.	21-⅞" D. RIV.	
NO. OF RIV. (FRAME TO BKT.)	14-⅞" D. RIV.	21-⅞" D. RIV.	

STRENGTHENING OF BOTTOM FORWARD.

FROM FORWARD OF 3/5 L ⊗ TO COLLISION BULKHEAD.

PITCH OF RIVET IN FRAME TO BE 5½ DIA.

FRAME ANGLE 5"×5"×.48" A. FROM MARGIN PL. TO MARGIN PLATE.

INTL. ADDITIONAL SIDE GIRDER TO BE FITTED AT 8'-0" APART & ½ HEIGHT GIRDER EXTENDING AS FAR AS PRACTICABLE.

FLOOR PLATES OR INTERCOSTALS ARE NOT TO BE FLANGED.

SHELL PLATINGS THREE STRAKES NEXT THE KEEL TO HAVE MIDSHIP THICKNESS .68" MAINTAINED.

BILGE KEELS.	
LENGTH ABOUT	130 FT. AMIDSHIPS.
BULB PLATE	12"×.50"
SHELL ANGLE	5"×5"×.50" A.
DEPTH OF GIRDER	14"

CASING & TRUNK SKYLIGHTS.	CASING	TRUNK SKYLIGHT.
COAMING PLATE	.34" ON 2ND & UPPER DK. .30"	.25"
PLATE	.26"	.25"
STIFFENER	3"×2½"×.30" A.	3"×2½"×.25" A.
" SPACING	33" APART	33" APART

DECK HOUSES.	UPPER DECK.	BRIDGE DECK	BOAT DECK.
COAMING PLATE.	.32"	.28"	.25"
HOUSE PLATE	.32"	.28"	.25"
DECK ANGLE	6"×3"×.36" A.	6"×3"×.36" A.	6"×3"×.36" A.
STIFFENER	3½"×2½"×.34" A SPACED AS PER PLAN.	3½"×2½"×.30" A.	3"×2½"×.25" A.
WEB FRAME AS PER CONSTRUCTION PROFILE & DECK PLAN.			

DECKS.	F'CLE.	WINCH PLATFM.	BOAT.
STRINGER PLATE	36"×.38"	24"×.30"	48"×.30"
" ANGLE	—	3"×3"×.30" A.	3"×3"×.30" A.
SHELL "	3½"×3½"×.38" A.	—	—
G. WATERWAY ANGLE	2½"×2½"×.36" A.	2½"×2"×.36" A. (AFT)	2½"×2"×.36" A.
DECK PLATE.	.30"	.25"	AS PER DK. PLAN.
WOOD PLANK.	3½" TEAK IN WAY OF WINDLASS & RUN OF CABLES 3" O.P. ELSEWHERE	2½" O.P.	2½" O.P.
CURTAIN PLATE	—	12"×.32"	14"×.34"
DECK BEAM & KNEE AS PER DECK PLAN.			

DEKS.	BRIDGE DECK.		UPPER DECK.	
	STRENGTH DECK	ELSEWHERE	OUTSIDE OF STRENGTH BRIDGE DK.	INSIDE OF STRENGTH BRIGE DK.
STRINGER PLATE	66"×.50"	66"×.38"	66"×.75"-41"×.44" 1.12" AT BREAKS	.44"
" ANGLE	5"×5"×.50" A.	3"×3"×.38" A.	—	3"×3"×.45" A.
SHELL "	—	CURTAIN PL. 16"×.44"	6"×6"×.74"-3½"×3½"×.44" A.	3½"×3½"×.46" A.
G.W. WAY ANGLE	3"×2½"×.36" A.	2½"×2½"×.36" A	3"×2½"×.36" A	—
DECK PLATE	.42"	AS PER DK. PLAN.	.51" 8'-0" OPENING .54" 9'-0" " } -.36" .44" INSIDE OPENING	.42" .36" INSIDE OPEN.
WOOD PLANK	3" O.P. EXPOSED 2½" O.P. ENCLOSED		3" O.P. EXPOSED 2½" O.P. ENCLOSED.	
DECK BEAM & KNEE AS PER DECK PLAN.				

DECKS.	2ND DECK.		3RD DECK.	
	OUTSIDE OF BRIDGE	IN WAY OF BRIDGE	ELSEWHERE	IN WAY OF DEEP TANK.
STRINGER PL.	51"×.46"-39"×.36"	51"×.40"	.34"	.42"
" ANGLE	3"×3"×.46"-.36" A.	3"×3"×.40" A	3"×3"×.34" A.	—
SHELL "	3½"×3½"×.46"-.36" A	3½"×3½"×.46" A	3½"×3½"×.34" A.	5"×5"×.42" A.
DECK PLATE	.42"-.32" .36 INSIDE OPENING	.32" INSIDE OPEN .36"	.30"	.42"
WOOD PLANK	2" O.P. IN WAY OF CREW'S QUARTER		—	—
DECK BEAM & KNEE AS PER DECK PLAN.				

RIVETING NOTE.		
END CONNECTION	FOR ½ L. ⊗	AT ENDS
FLAT KEEL PLATE	LAPPED & 4R	LAPPED & 3R.
BOTTOM PLATING	"	"
SIDE "	" 3R.	"
SHEER STRAKE (M.)	※ 3R. " 4R.	"
STRAKE BELOW (L.)	※ 3R. " 4R.	"
BRIDGE SIDE PLATING	" 3R.	—
UPPER DECK STRINGER PLATE	※ 3R. " 4R.	" 3R
" " PLATING	※ 2R. " 3R.	" 1R.
2ND DECK STRINGER PLATE	※ 2R. " 3R.	" 2R.
" " PLATING	" 2R.	" 1R.
3RD DECK STRINGER PLATE	" 1R	" 1R
" " PLATING	"	"
BOAT DECK STRINGER PLATE.	" 2R.	—
" " PLATING	"	—
BRIDGE DECK STRINGER PLATE	" 3R	—
" " PLATING	" 2R	—
F'CLE DECK STRINGER PLATE	—	LAPPED & 2R
" " PLATING.	—	" 1R.
INNER BOTTOM M.L. STRAKE	LAPPED & 3R	" 2R
OTHER "	" 2R	" 1R
MARGIN PLATE	" 3R	" 3R
CENTRE GIRDER PLATE	" 4R	" 3R
※ IN WAY OF BRIDGE.		

CASING TOP
CAMBER 9"
5"×3"×.32" A.
3"×3"×.34" A.
BOAT DECK HOUSE TOP IN WAY OF SOCIAL HALL
3/4"-3/8" D. RIV. ON EACH ARM.
3"×2½"×.25" A. SPACED AS PER CON. PRO. & DECK PLANS.
ENGINE CASING
3"×2½"×.25" A. SPACED 33" APART
5"×3"×.36" A.
BOAT DK.
SKETCH IN WAY OF WEB STANCHION.
BOAT DECK
WEB FRAME SPACED AS PER PLAN
5"×5"×.40" TEE SPACED 8'-3" APART
WEB BEAM SPACED AS PER DECK PLAN
6"×6"×.40" ANGLE LUG (DOUBLE)
12"D
BRIDGE DK.
8"×3½"×3½"×.42" CH. WITH 2 ROWS OF PILLAR
BRIDGE DECK
WEB FRAME SPACED AS PER PLAN
STANCHION 5"×5"×.40" TEE SPACED 8'-3" APART
FITTED BETWEEN STANCHIONS
UPPER DK.
CAMBER 9"
8"×3"×3"×.42" CH. WITH 2 ROWS OF PILLAR
WEB FRAME SPACED AS PER PLAN
DEPTH MOULDED
CAMBER 4"
2ND DK.
8"×3½"×3½"×.40" CH. WITH 2 ROWS OF PILLAR
3RD DK. IN WAY OF ENGINE SPACE
8"×3½"×3½"×.50" CH. WITH 2 ROWS OF PILLAR
3RD DK.
M
L
J
H
G
F
E
D
C
B
A
K
11"×3½"×.54" B.A. FRAME
SPARRING:-
6"×2" SOFT WOOD TO BE FITTED IN HOLDS & TWEEN DECK CARGO SPACES, SPACED NOT MORE THAN 8" APART.
N.B.:- SOLID FLOOR TO BE FITTED ON EVERY FRAME IN ENGINE SPACE, FORD. OF 3/5 L ⊗ & AT NARROW ENDS, TO BE FITTED ON EVERY 2ND FRAME UNDER DEEP TANKS, ELSEWHERE ON EVERY 3RD FRAME, PARTIAL SOLID FLOORS UNDER THRUST SEATINGS & UNDER HEELS OF W.S. PILLARS.
NO LIGHTENING HOLES IN FLOORS OR INTERCOSTAL SIDE GIRDER IN WAY OF W.S. PILLARS.
CONTINUOUS GUSSET PLATE .48"-.44"
2½" SOFT WOOD CEILING ON 2" SLEEPER.
30"×20"
24"×20"
18"×14"
3½"×3½"×.48" A.
5"×5"×.66" A.
BASE LINE TOP OF KEEL
SECTION THROUGH AFTER HOLDS
DETAILS AS PER BKT. PLAN
OPEN FLOOR IN HOLDS
SOLID FLOOR IN WAY OF MAIN ENGINES.
27"×15"
20×27"
27"×28"
22"×18"
5"×5"×.38" A.
3"×4" WATER COURSE
7'-10" ABOVE TOP OF KEEL

DOUBLE BOTTOM		½ L - ENDS	ENG. SPACE	REMARKS.
CENTRE GIRDER	PLATE	48"×.62"-.48"	66"×.70"	TANK HEIGHT MEASURED FROM TOP OF KEEL.
	KEEL ANGLE	5"×5"×.66"-.60" D.A.	5"×5"×.66" A.	
	TOP "	3½"×3½"×.56"-.52" D.A.	7"×7"×.80" A.	
	VERT "	3½"×3½"×.48" A.	5"×5"×.58" A.	
CONTINUOUS SIDE GIRDER	PLATE	—	.70"	
	BOTTOM ANGLE	—	5"×5"×.58" A.	
	TOP "	—	6"×6"×.70" A.	7"×7"×.80" UNDER MAIN ENGINE SEATINGS
	VERT "	—	5"×5"×.58" A.	
SIDE GIRDER	PLATE.	.44"	.50"	
	BOTTOM ANGLE	3½"×2½"×.48" A.	3½"×3½"×.48" A.	
	TOP "	Do.	3½"×3½"×.50" D.A.	
	VERT. "	3"×3"×.42" A	3½"×3½"×.50" A	
HALF HEIGHT GIRDER	PLATE.	—	.62"	UNDER MAIN ENGINE SEATING.
	TOP ANGLE	—	7"×7"×.80" A.	
	VERT. "	—	3½"×3½"×.58" A. 6"×3½"×.58" A. ※	※ TO BE EXTENDED TO TOP OF FRAME
SOLID FLOOR	PLATE	.44"	.50"	
	FRAME	3½"×3½"×.48" A.	3½"×3½"×.48" A.	
	REV. FRAME	Do.	5"×5"×.50" A	5"×5"×.48" A. FOR FORD. OF 3/5 L. ⊗
OPEN FLOOR	PLATE	.44"	—	
	FRAME	7"×3½"×.38" B.A	—	
	REV. FRAME	6"×3"×.42" B.A.	—	
	STRUT.	Do.	—	10"×3½"×3½"×.42" CH. STRUT. BETWEEN INTERCOSTALS.
W.T. FLOOR	PLATE.	.52"	.52"	
	BOUNDARY ANGLE	3½"×3½"×.52" A.	3½"×3½"×.52" A	
	STIFFENER	3½"×3½"×.48" A.	3½"×3½"×.48" A	SPACED 30" APART.
INNER BOTTOM PLATING	MIDDLE LINE STRAKE	.56"×.56"-.46"	.56"	
	OTHER STRAKE	.48"-.42"	.56"	MAIN ENGINE BED PLATE ¾", BUTT STRAP FOR END & SEAM CONNECTIONS ⅞
	MARGIN PLATE	39"×.56" { FOR END 39"×.56" AFT " 31½"×.56"	.56"	
	" ANGLE	3½"×3½"×.56" A.	3½"×3½"×.56" A.	5"×5"×.56" A. IN WAY OF F.O. TANK.
	VERT. ANGLE OUTSIDE M.P.	6"×6"×.48" A.	6"×6"×.48" A	
	VERT. ANGLE INSIDE M.P.	6"×3½"×.48" A.	Do.	

"BUENOS AIRES MARU" & "RIO DE JANEIRO MARU"

S. Nos 456-7

MIDSHIP SECTION.

LLOYD'S CLASS 100 A.1 "WITH FREEBOARD."

460'-0"×62'-0"×39'-6"

(FINISHIED PLAN.)

M.V. "Rio de Janeiro Maru".

Nagasaki Report No.1726.

Y. Sakakibara
Dec. 9th 1929.

007846-007856-0130

M.V. "Rio de Janeiro Maru".

Nagasaki Report No.1726.

UENOS AIRES MARU"

IO DE JANEIRO MARU"

RN FRAME &

UP CASTING.

ALE 1/2" TO 1 FT.

NISHED PLAN.)

NAGASAKI WORKS, MITSUBISHI ZOSENKAISHA LTD.
三菱造船株式會社
NO. 15792
SHIP DESIGNING OFFICE
DATE MAY 12 1930
長崎造船所

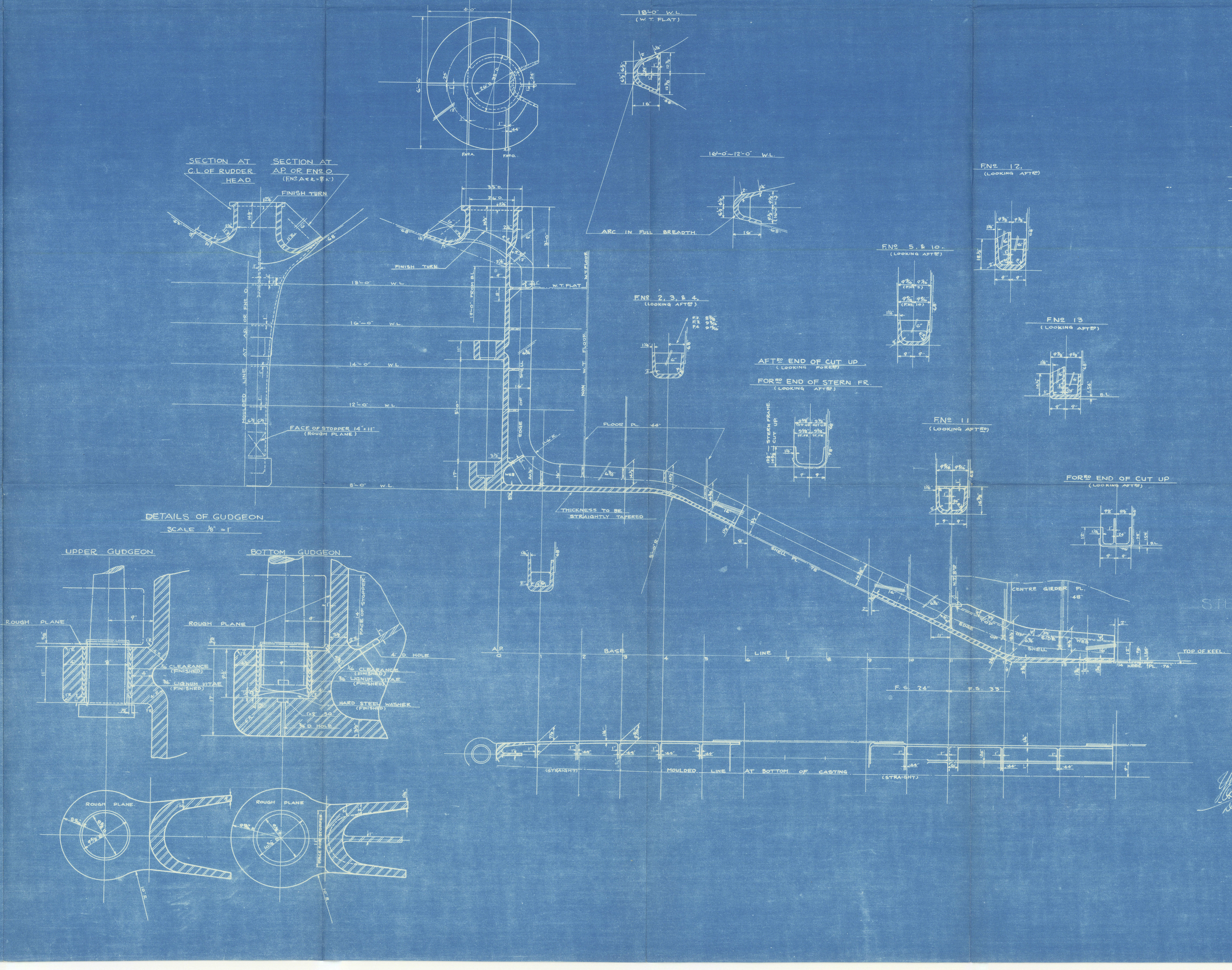
18'-0" W.L.
(W.T. FLAT)
16'-0"~12'-0" W.L.
ARC IN FULL BREADTH
SECTION AT C.L. OF RUDDER HEAD
SECTION AT A.P. OR F.No. 0
FINISH TURN
18'-0" W.L.
16'-0" W.L.
14'-0" W.L.
12'-0" W.L.
8'-0" W.L.
MOULDED LINE AT A.P. OR F.No. 0
FACE OF STOPPER 14"×11"
(ROUGH PLANE)
W.T. FLAT
W.T. FLOOR
NON W.T. FLOOR
EDGE OF SHELL
FLOOR PL. ·44"
THICKNESS TO BE STRAIGHTLY TAPERED
F.No 2, 3 & 4.
(LOOKING AFTD)
AFTD END OF CUT UP
(LOOKING FORD)
FORD END OF STERN FR.
(LOOKING AFTD)
STERN FRAME
CUT UP
F.No 5 & 10.
(LOOKING AFTD)
F.No 12.
(LOOKING AFTD)
F.No 13
(LOOKING AFTD)
B.L.
F.No 11
(LOOKING AFTD)
FORD END OF CUT UP
(LOOKING AFTD)
SHELL PL.
CENTRE GIRDER PL. ·48"
EDGE OF SHELL
KEEL PL. ·76"
TOP OF KEEL.
A.P.
BASE LINE
F.S. 24"
F.S. 33"
(STRAIGHT)
MOULDED LINE AT BOTTOM OF CASTING
(STRAIGHT)
DETAILS OF GUDGEON
SCALE 1/8" = 1"
UPPER GUDGEON
BOTTOM GUDGEON
ROUGH PLANE
ROUGH PLANE
FACE OF STOPPER
4" D. HOLE
1/4" CLEARANCE (FINISHED)
3/4" LIGNUM VITAE (FINISHED)
HARD STEEL WASHER (FINISHED)
ROUGH PLANE
ROUGH PLANE

MATERIAL:~ CAST STEEL.

WEIGHT:~
STERN FRAME 6.0 Kgr-TONS ABOUT.
CUT UP CASTING 1.9 " " "

M.V. "Rio de Janeiro Maru".

Nagasaki Report No.1726.

M.S. ~~"BUENOS AIRES MARU"~~ "RIO DE JANEIRO MARU"

STERN FRAME & CUT UP CASTING.

SCALE 1/2" TO 1 FT.
(FINISHED PLAN.)

SHIP DESIGNING OFFICE

Dec. 4th 1929.

ARM A.

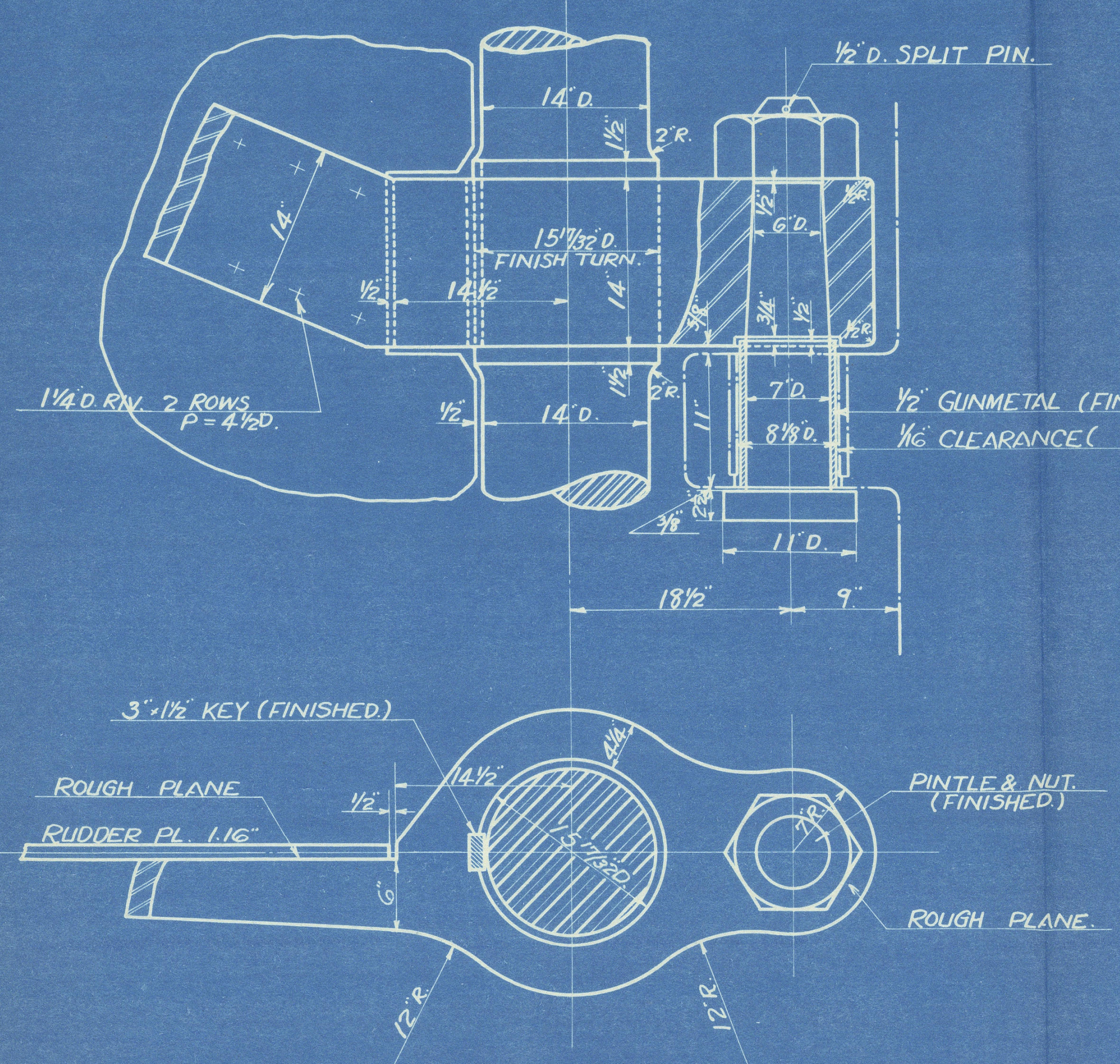
½"D. SPLIT PIN.
14"D.
1½"
2"R.
15 17/32"D.
FINISH TURN.
14"
14½"
½"
6"D.
3/8"
3/4"
½"R.
7"D.
8 1/8"D.
11"
11"D.
2¼"
1¼"D. RIV. 2 ROWS
P = 4½"D.
½" GUNMETAL (FINISHED)
1/16" CLEARANCE (")
18½"
9"
3"×1½" KEY (FINISHED.)
ROUGH PLANE
RUDDER PL. 1.16"
4¼"
15 17/32"D.
PINTLE & NUT.
(FINISHED.)
7"R.
ROUGH PLANE.
6"
12"R.

ARM. B.
(STOPPER ARM.)

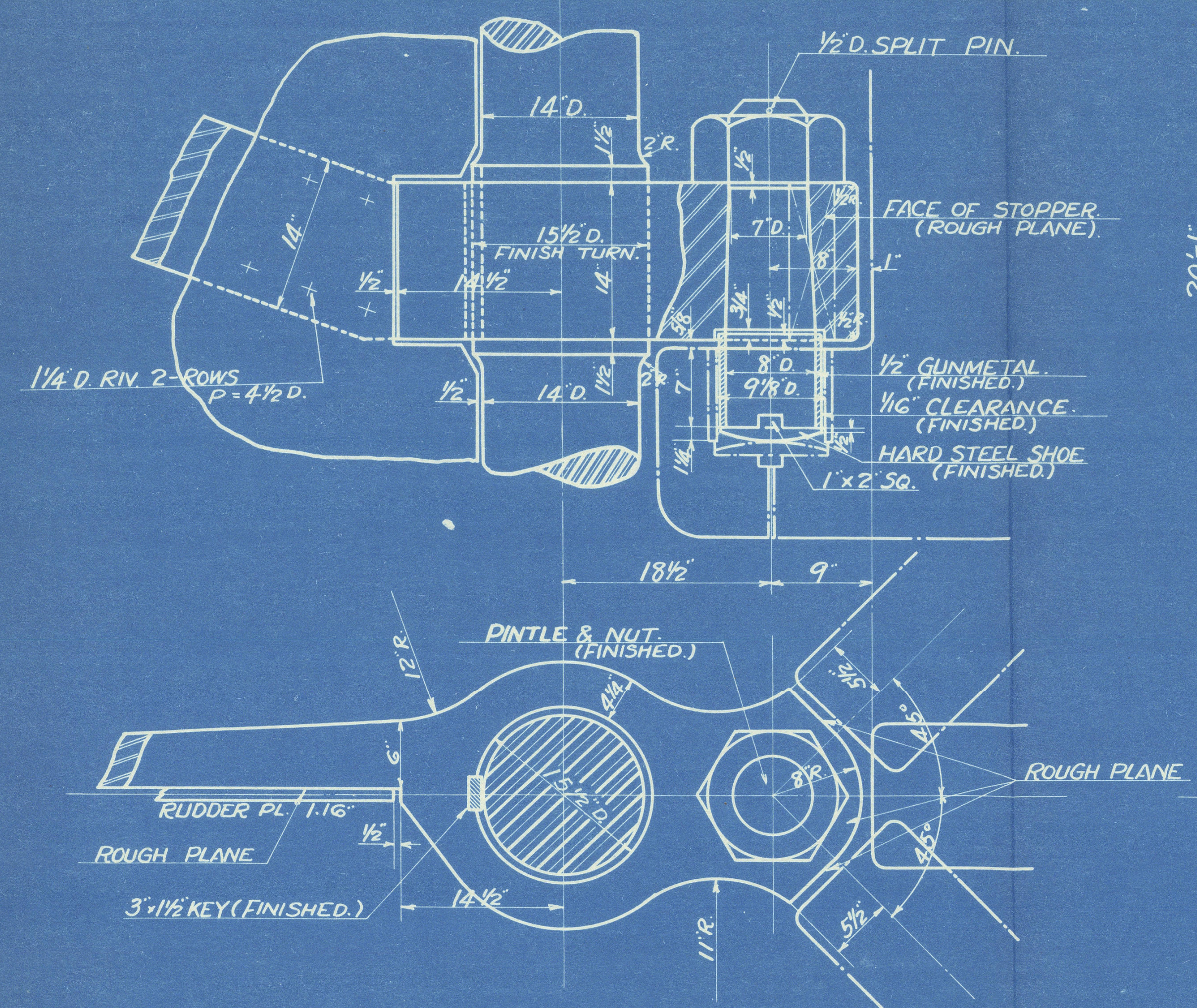
½"D. SPLIT PIN.
14"D.
1½"
2"R.
15½"D.
FINISH TURN.
14"
14½"
½"
7"D.
8"
FACE OF STOPPER.
(ROUGH PLANE).
1"
5/8"
3/4"
½"R.
8"D.
9 1/8"D.
7"
1¼"
1¼"D. RIV. 2-ROWS
P = 4½"D.
½" GUNMETAL.
(FINISHED.)
1/16" CLEARANCE.
(FINISHED.)
HARD STEEL SHOE
(FINISHED.)
1"×2" SQ.
18½"
9"
12"R.
PINTLE & NUT.
(FINISHED.)
4¼"
5½"
45°
6"
8"R.
15½"D.
ROUGH PLANE
RUDDER PL. 1.16"
ROUGH PLANE
3"×1½" KEY (FINISHED.)
14½"
11"R.

LIFTING EYEBOLT.

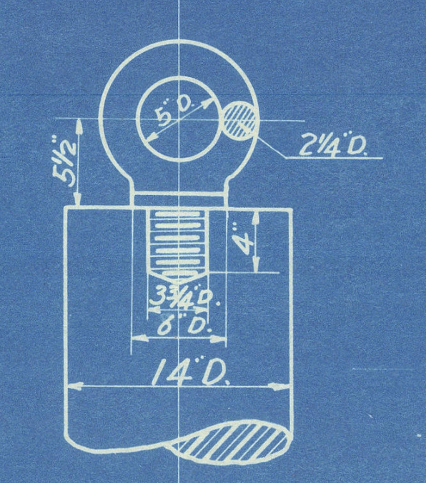
5½"
2¼"D.
4"
3¾"D.
8"D.
14"D.

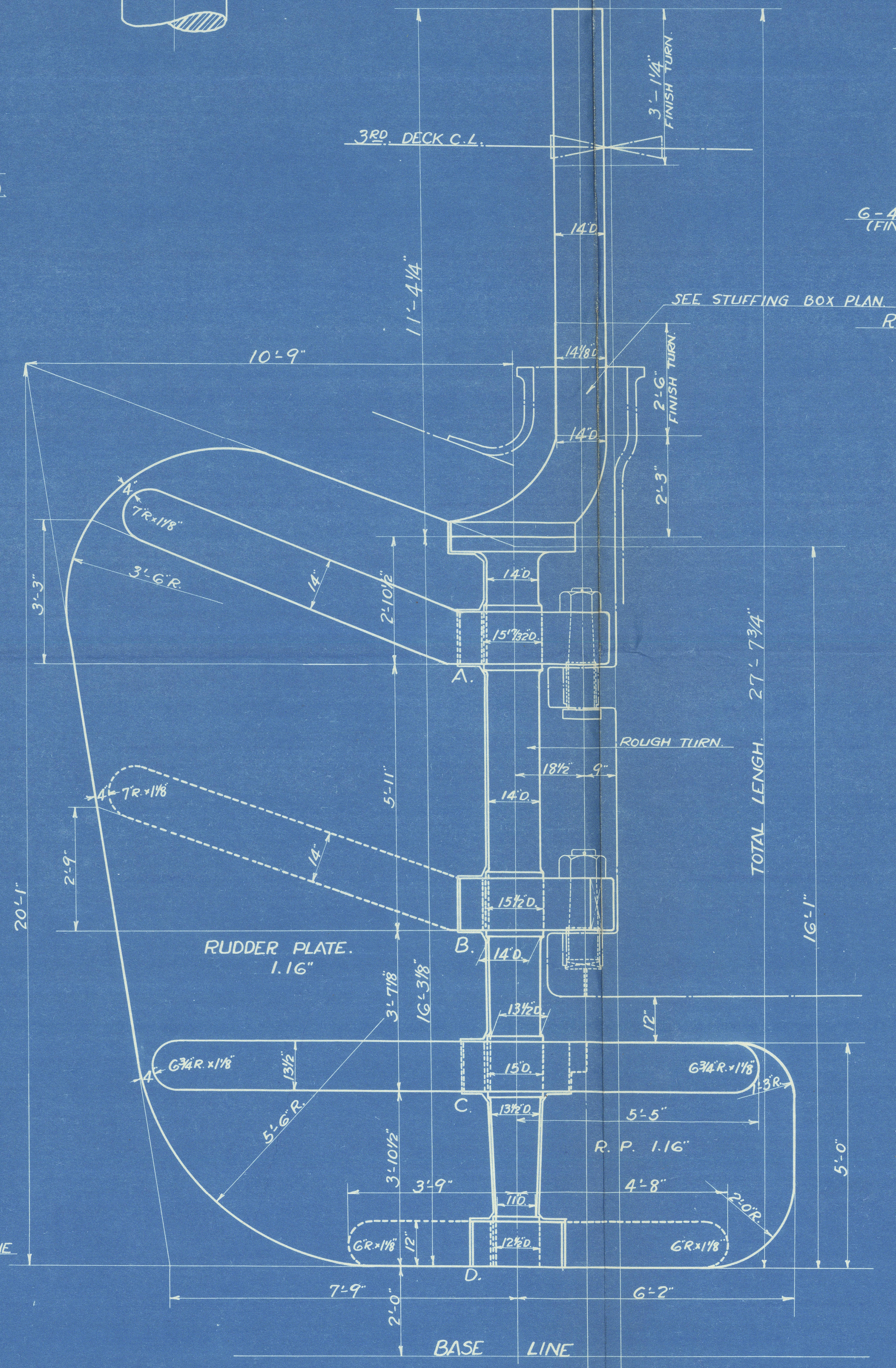
3RD. DECK C.L.
3'-1¼"
FINISH TURN.
14"D.
11'-4¼"
SEE STUFFING BOX PLAN.
10'-9"
14 1/8"D.
2'-6"
FINISH TURN.
14"D.
2'-3"
4"
7"R.×1 1/8"
3'-3"
3'-6"R.
14"
2'-10½"
15 17/32"D.
A.
ROUGH TURN.
18½"
9"
TOTAL LENGH. 27'-7¾"
5'-11"
7"R.×1 1/8"
2'-9"
20'-1"
15½"D.
B.
14"D.
RUDDER PLATE.
1.16"
16'-1"
3'-7 7/8"
16'-3 1/8"
13½"D.
12"
6¾"R.×1 1/8"
13½"
15"D.
C.
1'-3"R.
5'-6"R.
5'-5"
R. P. 1.16"
5'-0"
3'-10½"
3'-9"
4'-8"
11"D.
2'-0"R.
6"R.×1 1/8"
12½"D.
D.
7'-9"
6'-2"
2'-0"
BASE LINE

COUPLING.

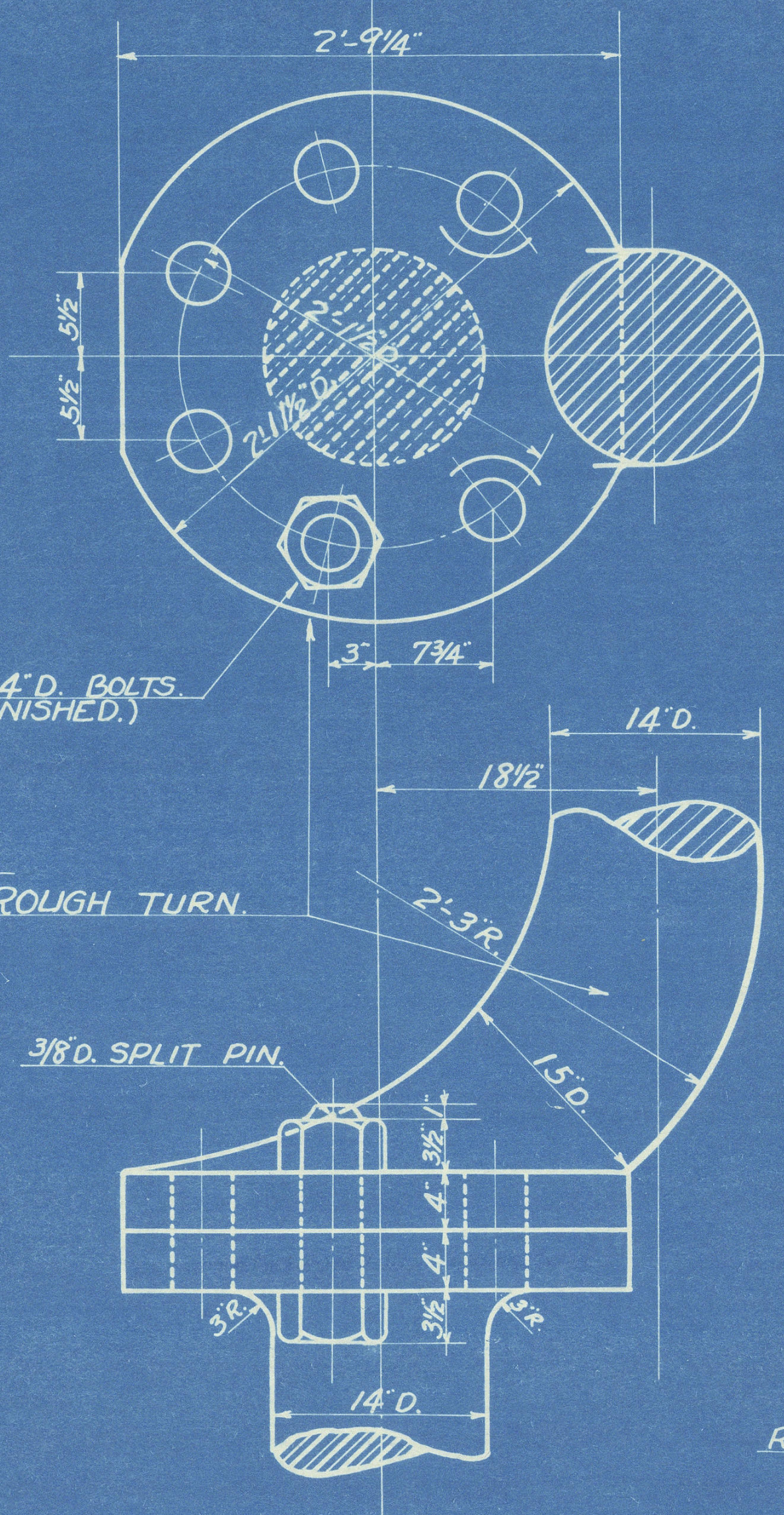
2'-9¼"
5½"
2'-1½"D.
2'-1½"D.
3"
7¾"
6-4"D. BOLTS.
(FINISHED.)
14"D.
18½"
ROUGH TURN.
2'-3"R.
15"D.
3/8"D. SPLIT PIN.
1"
3½"
4"
4"
3½"
3"R.
14"D.

MATERIAL:~

RUDDER HEAD. } FORGED STEEL.
MAIN PIECE.
ARMS. ------------------ CAST STEEL.
PINTLES, BOLTS, NUTS, KEYS,
& EYEBOLT. ------------- FORGED STEEL.

WEIGHT:~

RUDDER HEAD ------- 3.5 Kg-TONS ABOUT.
MAIN PIECE. ----------- } 9.7 " " "
ARMS. -----------------
PLATES. --------------- 3.5 " " "

TOTAL 16.7 Kg-TONS ABOUT.

ARM. C.

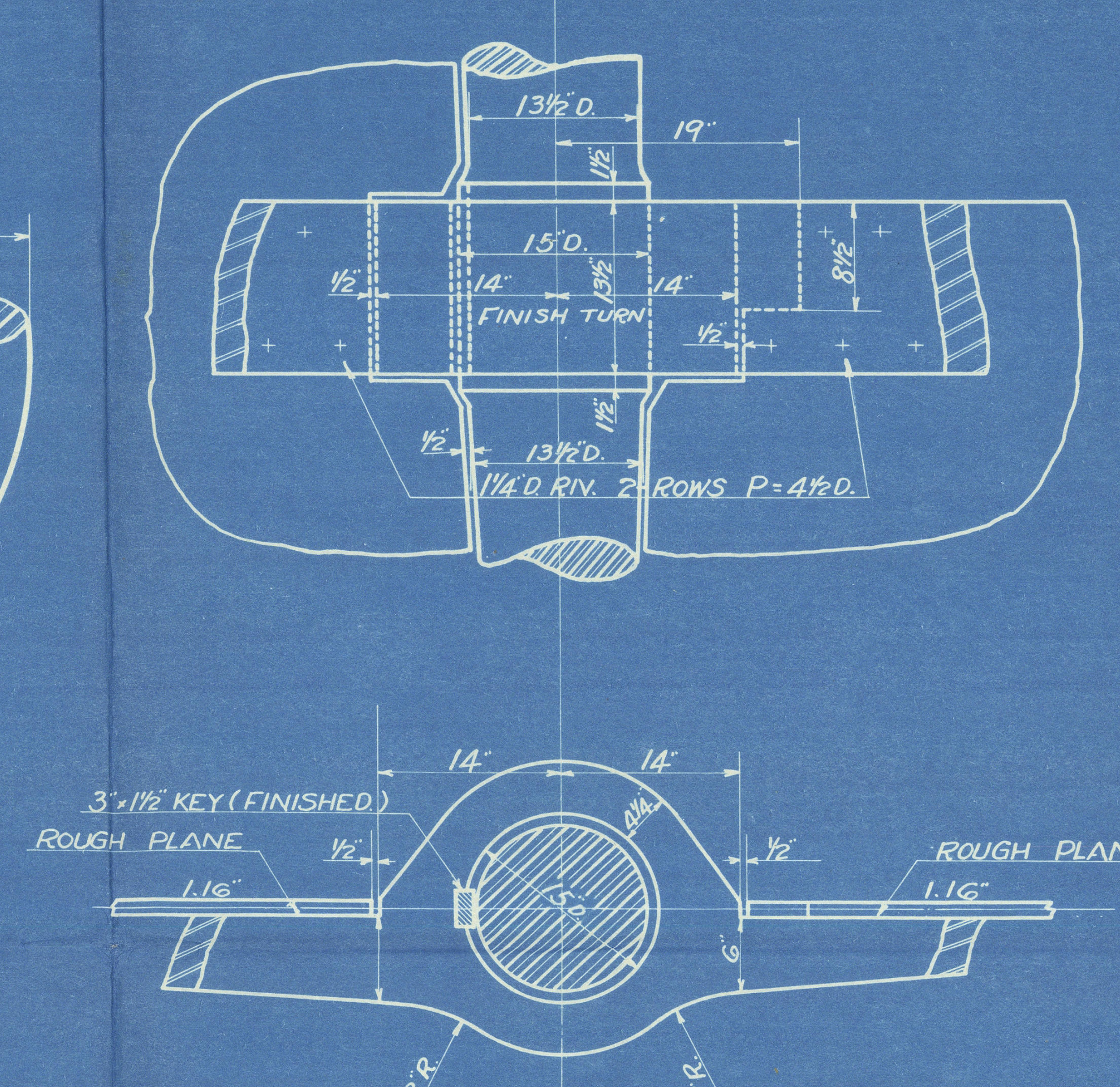
13½"D.
19"
1½"
15"D.
14"
13½"
14"
FINISH TURN
8½"
½"
13½"D.
1¼"D. RIV. 2-ROWS P = 4½"D.
14"
14"
3"×1½" KEY (FINISHED.)
ROUGH PLANE
½"
1.16"
4¼"
15"D.
ROUGH PLANE
1.16"
6"
12"R.
12"R.

ARM D.

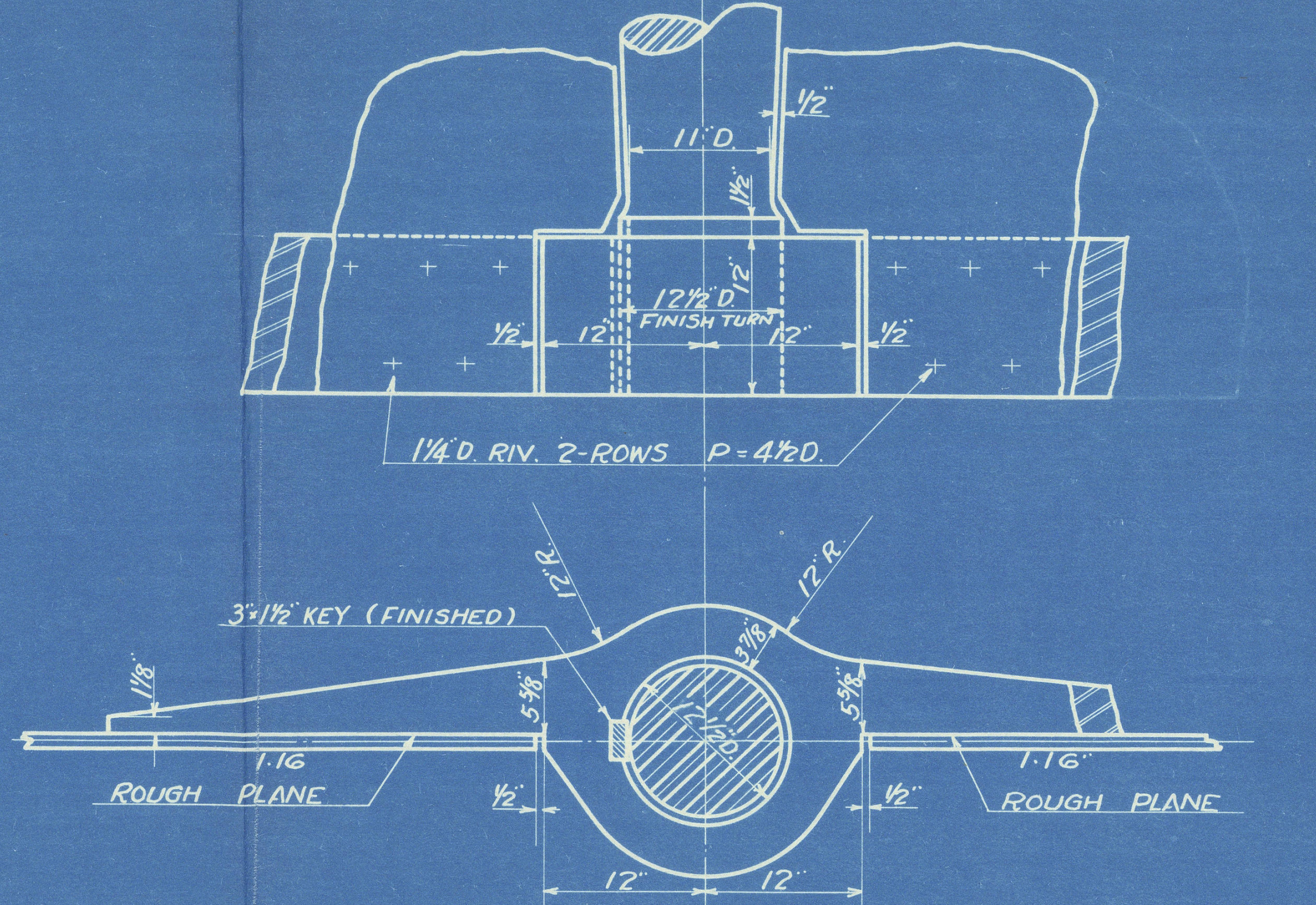
½"
11"D.
1½"
12½"D.
12"
FINISH TURN
12"
½"
1¼"D. RIV. 2-ROWS P = 4½"D.
12"R.
12"R.
3"×1½" KEY (FINISHED)
1/8"
3 7/8"
5 5/8"
12½"D.
1.16
ROUGH PLANE
½"
1.16"
ROUGH PLANE
12"
12"

1

M/V "BUENOS AIRES MARU".
Nagasaki Report No. 1700.

M. S. "BUENOS AIRES MARU" & "RIO DE JANEIRO MARU"

RUDDER.

SCALE ½ INCH TO 1 FT.
DETAILS 1 INCH TO 1 FT.
(FINISHED PLAN.)

Dec. 4th 1929

NAGASAKI WORKS, MITSUBISHI ZOSENKAISHA, L.
三菱造船株式會社
No. 13565
SHIP DESIGNING OFFICE
DATE DEC 10 1929
長崎造船所

008679-008690-0232

M.V. "Rio de Janeiro Maru".

Nagasaki Report No.1726.

M. S. RIO DE JANEIRO MARU.

RUDDER

SCALE 1/2" TO 1 FT.
DETAILS 1" " 1 FT.

(FINISHED PLAN)

H. Sakakibara
May 24th 1930.

NAGASAKI WORKS, MITSUBISHI ZOSENKAISHA, LTD.
三菱造船株式會社
NO. 16058
SHIP DESIGNING OFFICE
DATE MAY 24 1930
長崎造船所

007846-007856-0131

007846-007856-0131

© 2020
Lloyd's Register
Foundation

MATERIAL:-
RUDDER HEAD. } FORGED STEEL.
MAIN PIECE }
ARMS.---------- CAST STEEL.
PINTLES, BOLTS, NUTS, KEYS,
& EYEBOLT----- FORGED STEEL.

WEIGHT:-
RUDDER HEAD------- 3.5 kg.-TONS ABOUT.
MAIN PIECE.---------- } 9.7 " " "
ARMS. ---------------- }
OUTSIDE & IN SIDE R.PL.- } 8.108kg " "
FLD.PL, ANGLE & LINER-- }
GRANULATED CORK, BITUMEN & ETC.
1.545kg " "
TOTAL 22.853kg-TONS ABOUT.

N. B.;-
INSIDE RUDDER SPACE TO BE PACKED WITH GRANULATED CORK MIXED WITH BITUMEN EXCEPT PINTLE COVERING PART WHERE NO PACKING.

LIFTING EYEBOLT
ARM A.
½" D. SPLIT PIN
½" GUNMETAL (FINISHED)
¾" CLEARANCE (")
FINISH TURN
3"×1½" KEY (FINISHED)
ROUGH PLANE
RUDDER PL. 1.16
PINTLE & NUT (FINISHED)
ARM B (STOPER ARM)
FASH OF STOPPER (ROUGH PLANE)
GUNMETAL (FINISHED)
CLEARANCE (FINISHED)
HARD STEEL SHOE (FINISHED)
1½" D. RIV. 2-ROWS P=4½" D.
SECTION AT "B B" (LOOKING AFT.)
FLANGED PL. 50
50" COVER PL.
E. WELDING
¾" DIA RIV. PITCH=5 D.
E. TACK WELD
⅝" D. TAP P=5 D.
TAPERED LINER (3½" BREADTH)
INSIDE RUDDER PL. 1.16"T
OUTSIDE RUDDER PL.
2⅞" D. LIFTING HOLE
SEE STUFFING BOX PLAN
ROUGH TURN
TAPERED LINER
BUTT STRAP
LINER
OUTSIDE RUDDER PLATE 50"
TOTAL LENGTH
BASE LINE
SECTION AT "D D"
SECTION AT "C C" (LOOKING AFT.)
COVER PL.
SECTION AT "A A"
FLD. PLATE .75"T
OUTSIDE R. PL. 50"
FLANGED PL. .75"T
E. WELDING
RUDDER ARM
INSIDE R. PLATE 1.16"T
3"×1½" H.R. BAR
T. LINER
ARM C.
COUPLING
6¼" D. BOLTS (FINISHED)
ROUGH TURN
⅜" D. SPLIT PIN
ARM D.

M.V. "Rio de Janeiro Maru".

Nagasaki Report No.1726.

M. S. RIO DE JANEIRO MARU.
RUDDER
SCALE ½" TO 1 FT.
DETAILS 1" " 1 FT.

(FINISHED PLAN)

SHIP DESIGNING OFFICE

May 26th 1930.

007876-007856-0151